ITEM NO.	PART NUMBER	DESCRIPTION	QTY.	Material
1	C5	C5 COUPLING	1	CAST GRAY IRON
2	M44	1" - 8 UNC GALV. STUD X 7.00 LG.	1	ASTM A193 GR B7
3	M06	1" - 8 UNC GALV. HEAVY HEX NUT	3	ASTM A194 GR 2H
4	M05	SPACER	1	HDPE
5	M07	1" GALV. FLAT WASHER	2	ASTM F436

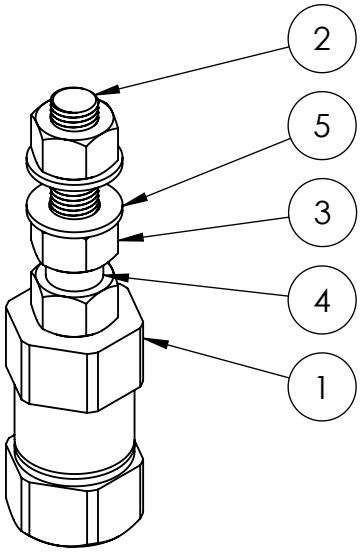

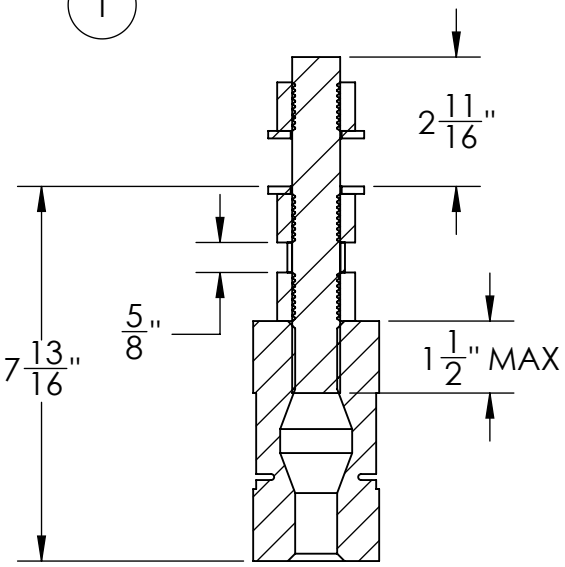

SECTION A-A

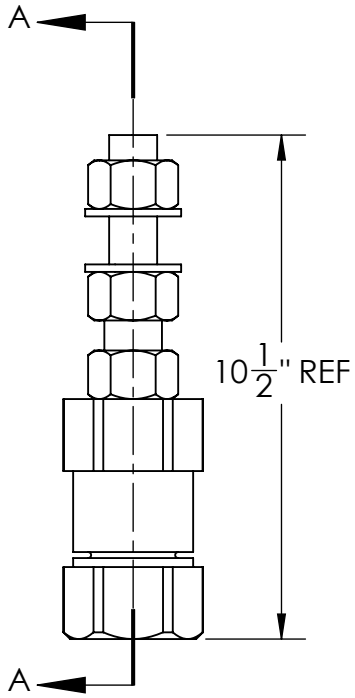

REFER TO INSTALLATION INSTRUCTIONS

REV.	DESCRIPTION	APPROVED	DATE
1	COUPLER PROFILE UPDATED		10/15/09
0	ISSUED FOR CLIENT REVIEW		1/14/09

	NAME	DATE
DRAWN	MB	Jan 14/09
CHECKED		

TOLERANCES UNLESS SPECIFED

FRACTIONAL	± 1/32"
TWO PLACE DECIMAL	± .02"
THREE PLACE DECIMAL	± .002"
ANGULAR	± 1°
DIMENSIONS	INCHES

SCALE 1:4 SHEET 1 OF 1

Safety Base Ltd.
Luminaire Support
C5 Assembly
Assembly Details

SIZE	DWG. NO.	REV.
A	C5 Assy	1